PHILIPS

Electric Storage Water Heater

AWH1641/10
AWH1642/10
AWH1643/10
AWH1646/10
AWH1647/10



User manual

General Remark

- The installation and maintenance has to be carried out by qualified professials or Philips authorized technicians.
- The manufacturer shall not be held responsible for any damage or malfunction caused by wrong installation or failing to comply with following instructions included in this pamphlet.
- For more detailed installation and maintenance guidelines, please refer to below chapters.

TABLE OF CONTENTS

TITLE	PAGE
1.Cautions	(1)
2.Product introduction	(2)
3.Unit installation	(4)
4.Methods of using	(7)
5.Maintenance	(9)
6.Troubleshooting	(10)
7.Produce information with EU regulation	(11)
8.Packing List	(16)

1. CAUTIONS

Before installing this water heater,check and confirm that the earthing on the supply socket is reliably grounded. Otherwise, the electrical water heater can not be installed and used. Do not use extension boards. Incorrect installation and use of this electrical water heater may result in serious injuries and loss of property.

Special Cautions

- The water heater is not intended for use by people (including children) with reduced physical, sensory or mental capabilities, or lack of experience and knowledge, unless they have been given supervision or instruction regarding use of the appliance by a person responsible for their safety. Children should be supervised to ensure that they do not play with the heater.
- The wall in which the electrical water heater is installed must be able to bear the load more than two times of the heater filled fully with water distortion and cracks. Otherwise, other strengthening measures must be adopted.
- The supply socket must be earthed reliably. The installation height of the supply socket must not be lower than 1.8m. The rated current of the socket must not be lower than 16A. The socket and plug must be kept dry to prevent electrical leakage. If the flexible power supply cord is damaged, the special power supply cord provided by the manufacturer must be selected, and replaced by the professional maintenance personnel.
- The maximum inlet water pressure of the appliance is 0.5MPa and the minimum inlet water pressure is 0.1MPa, if this is necessary for the correct operation of the appliance.
- When using the heater for the first time (or the first use after maintenance), the heater can not be switched on until it has been filled fully with water. When filling the water, at least one of the outlet valves at the outlet of the heater must be opened to exhaust the air. This valve can be closed after the heater has been filled fully with water.
- The pressure relief valve attached with the heater must be installed at the cold water inlet of this heater, and make sure it is not exposed in the fog. The water may be outflowed from pressure relief valve, so the outlet pipe must open wide in the air. In order to drain away the water inside the inner container, it can be drained away from the pressure release valve. Unscrew the threaded screw on the pressure relief valve, and lift the drain handle upwards (See Fig.1). The drainage pipe connected to the pressure release hole must be kept downward in a frost-free environment. The water may drip from the discharge pipe of the pressure-relief device and that this pipe must be left open to the atmosphere.
- During heating, there may be drops of water dripping from the pressure release hole of the pressure relief valve, this is a normal phenomenon. The pressure release hole shall not be blocked under no circumstances, otherwise, the heater may get damaged, even resulting in accidents. If there is a large amount of water leak, please contact customer service center for repair.
- The pressure relief valve need to be checked and cleaned regularly, so as to make sure it will not be blocked.
- Since the water temperature inside the heater can reach up to 75°C, the hot water must not be exposed to human bodies when it is initially used. Adjust the water temperature to a suitable temperature to avoid scalding.
- If any parts and components of this electrical water heater are damaged, please contact customer service center for repair.

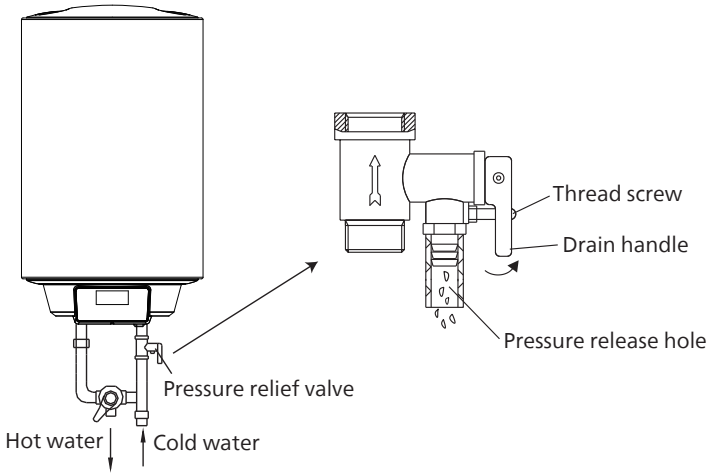

(Fig.1)

2. PRODUCT INTRODUCTION

2.1 Technical Performance Parameters

Model	Volume (L)	Rated Power (W)	Rated Voltage (ACV)	Rated Pressure (MPa)	Max Of Water Temperature (℃)	Protection Class	Waterproof Grade
AWH1646/10	30	1500	220-240	0.75	75	I	IPX4
AWH1641/10	50	1500	220-240	0.75	75	I	IPX4
AWH1642/10	80	1500	220-240	0.75	75	I	IPX4
AWH1643/10	100	1500	220-240	0.75	75	I	IPX4
AWH1647/10	110	1500	220-240	0.75	75	I	IPX4

2.2 Brief introduction of product structure

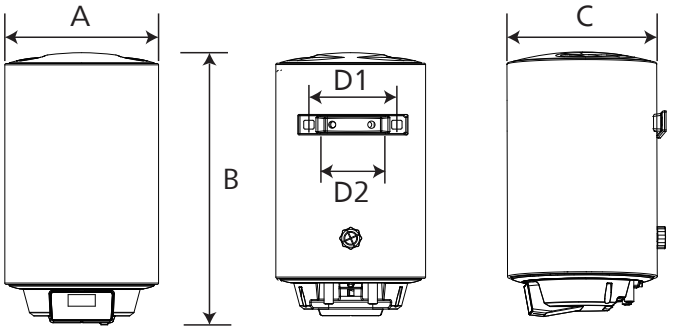

	30L	50L	80L	100L	110L
A	340	385	450	450	450
B	605	770	805	970	1055
C	340	385	450	450	450
D1	278	278	278	278	278
D2	130-310	130-310	130-310	130-310	130-310

(Note:All dimensions are in mm)

2.3 Internal Wire Diagram

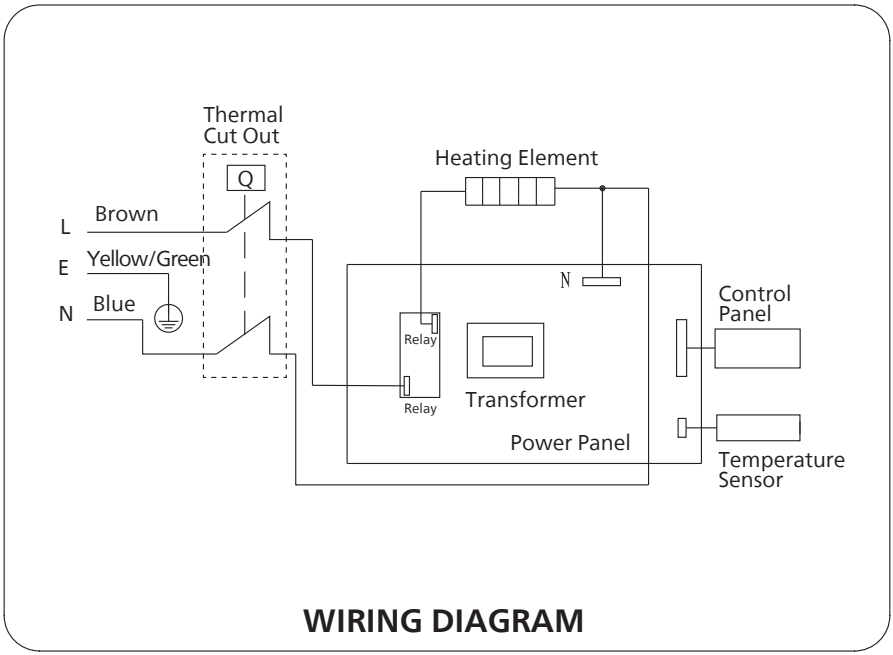

WIRING DIAGRAM

3. UNIT INSTALLATION

3.1 Installation Instruction

① This electrical water heater shall be installed on a solid wall. If the strength of the wall cannot bear the load equal to two times of the total weight of the heater filled fully with water, it is then necessary to install a special support.
Incase of hollow bricks wall, ensure to fill it with cement concrete completely.

② After selecting a proper location, determine the positons of the two install holes used for expansion bolts with hook (200mm), Make two holes in the wall with the corresponding depth by using a chopping bit with the size matching the expansion bolts attached with the machine, insert the screws, make the hook upwards, and then hang the electrical water heater on it or by the lower edge of the bracket.（See Figure 2 in Section 3.1.）(see Fig.2).

The detailed operation procedure is shown below:

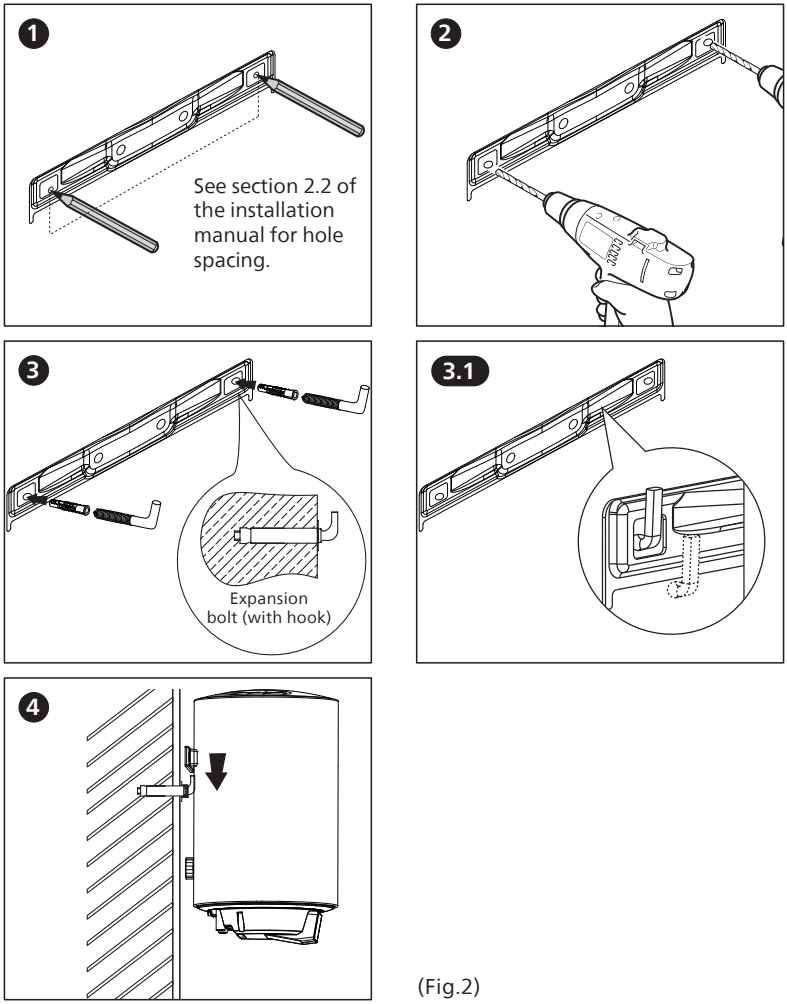

(Fig.2)

③ Install the supply socket in the wall. The requirements for the socket are as follows: 250V/10A, single phase, three electrodes. It is recommended to placed the socket on the right above the heater. The height of the socket to the ground shall not be less than 1.8m (see Fig.3).

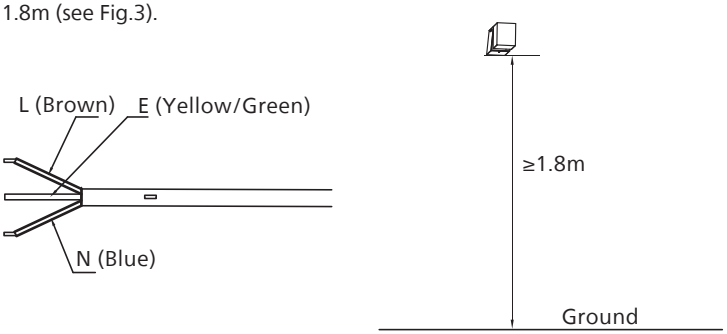

(Fig.3)

④ If the bathroom is too small, the heater can be installed at another place. However, in order to reduce the pipeline heat losses, the installation position of the heater shall be closed to the location shall be as near as possible to the heater.

3.2 Pipelines Connection

① The dimension of each pipe part is G1/2" .

② Connection of pressure relief valve with the heater on the inlet of the water heater.

③ In order to avoid leakage when connecting the pipelines, the rubber seal gaskets provided with the heater must be added at the end of the threads to ensure leak proof joints (see Fig.4).

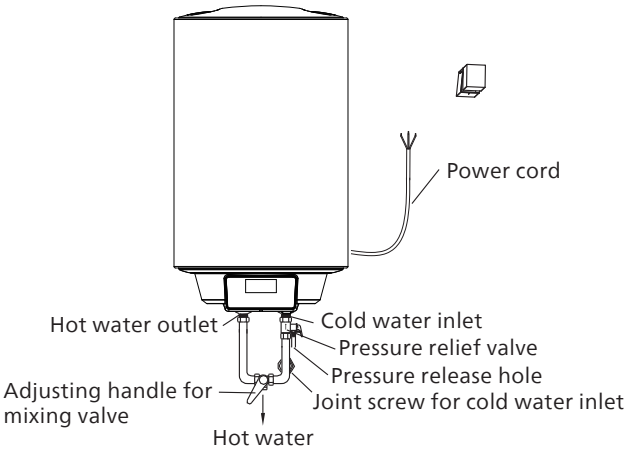

(Fig.4)

④ If the users want to realize a multi-way supply system, refer to the method shown in fig.5 for connection of the pipelines.

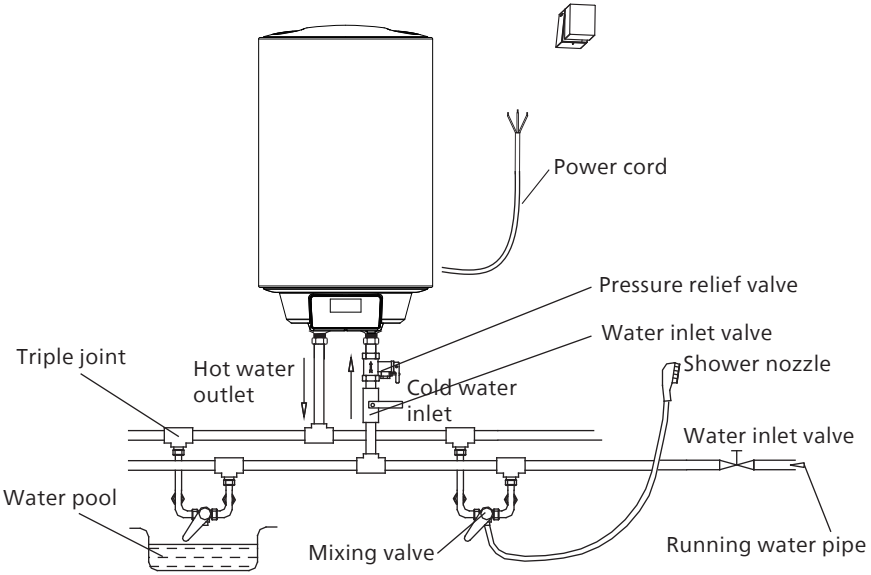

(Fig.5)

NOTE

Please be sure to use the accessories provided by our company to install this electric water heater. This electric water heater can not be hung on the support until it has been confirmed to be firm and reliable. Otherwise, the electric water heater may drop off from the wall, resulting in damage of the heater, even serious accidents of injury. When determining the locations of the bolt holes, it shall be ensured that there is a clearance not less than 0.2m on the right side of the electric heater, to convenient the maintenance of the heater, if necessary.

4. METHODS OF USING

- First, open any one of the outlet valves at the outlet of the water heater, then, open the inlet valve. The water heater gets filled with water. When water flows out of the outlet pipe it implies that the heater has been filled fully with water, and the outlet valve can be closed.

NOTE

During normal operation, the inlet valve shall be always kept open.

- Insert the supply plug into the supply socket, the indicator will light up this time.
- The thermostat will automatically control the temperature. When the water temperature inside the heater has reached the set temperature, it will switch off automatically, when the water temperature falls below the set point the heater will be turned on automatically to restore the heating.

4.1 Operation Of The Unit

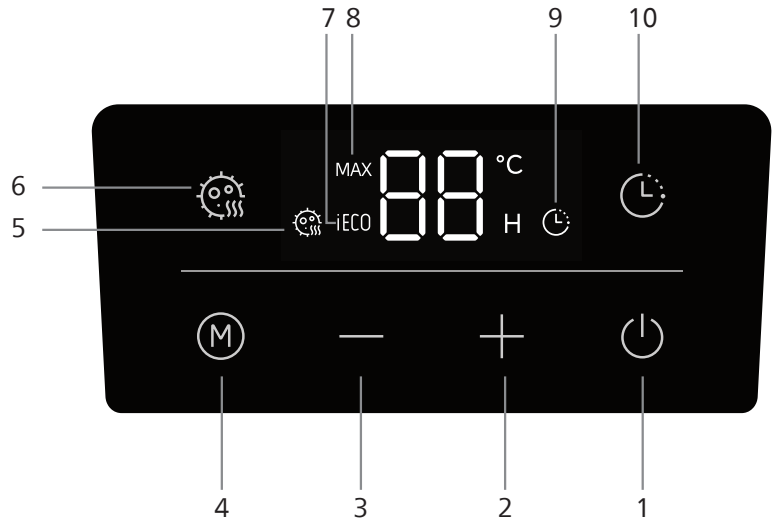

① "1" serves as the "ON/OFF" button.
It is the key for power "ON/OFF" operations. When power is connected, the display reaches full brightness. In the boot mode, pressing the "ON/OFF" button will shut down the system. In the shutdown mode, pressing the "ON/OFF" button will boot the system.

② The button "2" is marked as "+" and the button "3" is marked as "-".
They are used to adjust the set temperature of the water heater. The adjustment range is from 30°C to 75°C. Each press of the button adjusts the temperature by 1°C. Pressing and holding the button allows for continuous adjustment.

③ The button "4" is the mode button. There are a total of three modes: Normal Mode, MAX Mode, and iECO Mode. Press the button briefly to switch between the modes in sequence. Normal Mode: Users can set the water temperature themselves within the range of 30 - 75°C. MAX Mode: After entering this mode, indicator light 8 will illuminate, and the water heater will be set to 80°C. When exiting this mode, indicator light 8 will turn off.
iECO Mode: Enter the intelligent mode, and indicator light 7 will illuminate. In the intelligent mode, the system automatically learns the user's usage habits, and the machine then automatically adjusts the water temperature. Users cannot manually adjust the water temperature. When exiting the iECO mode, light 7 will turn off.

④ The button "6" is the high - temperature sterilization mode button.
After entering this mode, indicator light 5 will illuminate, and other modes will be exited simultaneously. Once the high - temperature sterilization is activated, the water heater will first heat the water to 80°C and then stop heating. At this point, the sterilization time starts to be counted. Five minutes after the start of counting the sterilization time, the system will automatically exit this mode and return to the normal mode.

⑤ The button "10" is the reservation countdown mode button.
After entering this mode, indicator light 9 will light up and flash. The time range is from 2 to 23 hours, and you can adjust it using buttons "2" and "3". If there is no operation within 5 seconds or you click button "10" again, the setting will be confirmed. Once the whole operation is completed, the reservation setting is finished.

4.2 Alarm and fault self-test

When dry failure, over-temperature fault, sensor open or short circuit fault, the display flashes on digital tube display E2, E3, E4 and other digital tube lights are displayed, if the buzzer is accompanied by six times short beep alarm, then all relays open, the keys do not function, the fault is removed and re-power, the water heater off to recover. In an energized state, the system automatically self-test, if it fails, then display the corresponding error code, and the system does not work (ie, the water heater can not start).

- Dry fault judgment: When the system detects the interior temperature rise slope ≥ 15 when rising slope 8 code "E2"
- Overtemperature fault determination: When interior temperature sensor temperature exceeds 90 degrees, it is determined that over-temperature, display flashes error code "E3".
- Sensor failure determination: sensor open circuit, short circuit alarm, display flashes error code "E4".

4.3 Error code for serviceman's use

E2: Dry heating protection---Add water and reheat.
E3: Overheating---Check the heating system or replace it.
E4: Sensor Fault---Check the sensor or replace it.

5. MAINTENANCE

⚠ WARNING

Before doing any maintenance, please cut off the power supply.

- Check the power plug and outlet as often as possible. Secure electrical contact and also proper grounding must be provided. The plug and outlet must not heat excessively.
- If the heater is not used for a long time, especially in regions with low air temperature(below 0℃), it is nessary to drain water from the heater to prevent damage of the water heater, due to water freezing in the internal tank.(Refer Cautions in this manual for the method to drain away the water from the inner container).
- To ensure long reliable water heater operation, it is recommended to regularly clean the internal tank and remove deposits on the electric heating element of the water heater, as well as check condition (fully decomposed or not) of the magnesium anode and, if necessary, replace it with a new one in case of full decomposition.Tank cleaning frequency depends on hardness of water located in this territory. Cleaning must be performed by special maintenance services. You can ask the seller for address of the nearest service center.
- The water heater is equipped with a thermal switch, which cuts off power supply of the heating element upon water overheating or its absence in the water heater. If the water heater is connected to the mains, but water is not heated and the indicator doesn't light up, then the thermal switch was switched off or not switched on. To reset the water heater to the operating condition, it is necessary to:
  1. De-energize the water heater, remove the plate of the side/lower cover.
  2. Press the button, located at the center of the thermal switch, see Fig.6;
  3. If the button is not pressed and there is no clicking, then you should wait until the thermal switch cools down to the initial temperature.

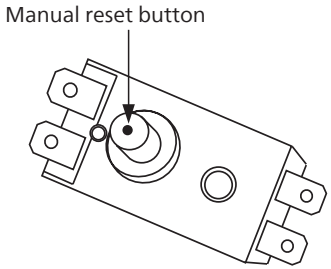

(Fig.6)

⚠ WARNING

Non-professionals are not allowed to disassemble the thermal switch to reset. Please contact prefessionals to maintain. Otherwise our company will not take responsiblity if any quality accident happens because of this.

6. TROUBLESHOOTING

Failures	Reasons	Treatment
The heating indicator light is off.	Failures of the temperature controller.	Contact with the professional personnel for repair.
No water coming out of the hot water outlet.	1. The running water supply is cut off. 2. The hydraulic pressure is too low. 3. The inlet valve of running water is not open.	1. Wait for restoration of running water supply. 2. Use the heater again when the hydraulic pressure is increased. 3. Open the inlet valve of running water.
The water temperature is too high.	Failures of the temperature control system.	Contact with the professional personnel for repair.
Water leak.	Seal problem of the joint of each pipe.	Seal up the joints.



NOTE

Parts illustrated in this use and care manual are indicative only, parts provided with the product may differ with illustrations. This product is intended for household use only. Specifications are subject to change without notice.

7. Produce information with EU regulation

The electrical storage water heater **AWH1646/10** of the company **Philips** Ltd. was tested with a declared load profile of the size **"S"**

The product fulfills and corresponds to the requirements of the commission regulation standards (No 814/2013) for electrical storage water heater and achieved a water heating energy efficiency of **ηwh=38.63%** that correspond to the water heating efficiency class **"A"**

In accordance with Annex Ⅱ Enercy Efficiency Classes article 1 of the commission regulation (No 812/2013)

The evaluation of the result of this report with respect of conformity with the related commission

regulation (No 812/2013 and 814/2019) is only a part of the conformity assessment to achieve the ErP-Label.

Electricity consumption Qelec, water heating energy efficiency ηwh and mixed water at 40℃ （V40）

Description	Parameter	Value	Unit
Smart control compliance	smart	1	
Smart control factor	SCF	24.84	%
Referenct energy	Q_{ref}	2.1	kWh
Useful energy content	Q_{H2O}	2.139	kWh
Correction ratio of reference and useful energy	Q_{ref}/Q_{H2O}	0.982	kWh
Daily electricityconsumption (measured)	Q_{test_elec}	3.015	kWh
Water temperature at the beginning of the 24h measurement cycle	T3	71.8	℃
Water temperature at the end of the 24h measurement cycle	T5	72.9	℃
Storage volume	M_{act}	-	kg
Storage volume	C_{act}	29.8	L
Daily electricity consumption (corrected)	Q_{elec}	2.923	kWh
Sequence of SMART tapping cycles used during the test	S/XS/S/XS/S		
Useful energy content of the hot water drawn-off during smart period $Q_{reference,H2O}$ expressed in kWh:	$Q_{reference,H2O}$	11.364	kWh
Useful energy content of the hot water drawn-off during smart period $Q_{smart,H2O}$ expressed in kWh:	$Q_{smart,H2O}$	11.246	kWh
The weekly electricity consumption with smart controls	$Q_{elec,week,smart}$	13.883	kWh
The weekly electricity consumption without smart controls	$Q_{elec,week}$	18.472	kWh
Water heating energy efficiency	η_{wh}	38.63	%
Annual Electricity Consumption	AEC	477.48	kWh
Water heating energy efficiency class	**A**		
Water temperature without tapping	T_{set}	75	℃
Average water temperature of inlet cold water	θ_c	10.4	℃
Normalised value of the average temperature	θ_p	68.2	℃
Calculated volume that delivered hot water of at least 40℃	V_{40}	47	L

The electrical storage water heater **AWH1641/10** of the company **Philips** Ltd. was tested with a declared load profile of the size **"M"**

The product fulfills and corresponds to the requirements of the commission regulation standards (No 814/2013) for electrical storage water heater and achieved a water heating energy efficiency of **ηwh=39.66%** that correspond to the water heating efficiency class **"B"**

In accordance with Annex Ⅱ Enercy Efficiency Classes article 1 of the commission regulation (No 812/2013)

The evaluation of the result of this report with respect of conformity with the related commission

regulation (No 812/2013 and 814/2019) is only a part of the conformity assessment to achieve the ErP-Label.

Electricity consumption Qelec, water heating energy efficiency ηwh and mixed water at 40℃ （V40）

Description	**Parameter**	**Value**	**Unit**
Smart control compliance	smart	1	
Smart control factor	SCF	19.74	%
Referenct energy	Q_{ref}	5.845	kWh
Useful energy content	Q_{H2O}	5.926	kWh
Correction ratio of reference and useful energy	Q_{ref}/Q_{H2O}	0.986	kWh
Daily electricityconsumption (measured)	Q_{test_elec}	7.368	kWh
Water temperature at the beginning of the 24h measurement cycle	T3	72.3	℃
Water temperature at the end of the 24h measurement cycle	T5	70.6	℃
Storage volume	M_{act}	-	kg
Storage volume	C_{act}	49.6	L
Daily electricity consumption (corrected)	Q_{elec}	7.364	kWh
Sequence of SMART tapping cycles used during the test	M/S/M/S/M		
Useful energy content of the hot water drawn-off during smart period $Q_{reference,H2O}$ expressed in kWh:	$Q_{reference,H2O}$	24.321	kWh
Useful energy content of the hot water drawn-off during smart period $Q_{smart,H2O}$ expressed in kWh:	$Q_{smart,H2O}$	23.932	kWh
The weekly electricity consumption with smart controls	$Q_{elec,week,smart}$	28.251	kWh
The weekly electricity consumption without smart controls	$Q_{elec,week}$	35.203	kWh
Water heating energy efficiency	η_{wh}	39.66	%
Annual Electricity Consumption	AEC	1294.5	kWh
Water heating energy efficiency class	**B**		
Water temperature without tapping	T_{set}	75	℃
Average water temperature of inlet cold water	θ_c	10.2	℃
Normalised value of the average temperature	θ_p	63.6	℃
Calculated volume that delivered hot water of at least 40℃	V_{40}	77	L

The electrical storage water heater **AWH1642/10** of the company **Philips** Ltd. was tested with a declared load profile of the size **"M"**

The product fulfills and corresponds to the requirements of the commission regulation standards (No 814/2013) for electrical storage water heater and achieved a water heating energy efficiency of **ηwh=39.91%** that correspond to the water heating efficiency class **"B"**

In accordance with Annex Ⅱ Enercy Efficiency Classes article 1 of the commission regulation (No 812/2013)

The evaluation of the result of this report with respect of conformity with the related commission

regulation (No 812/2013 and 814/2019) is only a part of the conformity assessment to achieve the ErP-Label.

Electricity consumption Qelec, water heating energy efficiency ηwh and mixed water at 40℃ （V40）

Description	**Parameter**	**Value**	**Unit**
Smart control compliance	smart	1	
Smart control factor	SCF	21.26	%
Referenct energy	Q_{ref}	5.845	kWh
Useful energy content	Q_{H2O}	5.956	kWh
Correction ratio of reference and useful energy	Q_{ref}/Q_{H2O}	0.981	kWh
Daily electricityconsumption (measured)	Q_{test_elec}	7.669	kWh
Water temperature at the beginning of the 24h measurement cycle	T3	73.2	℃
Water temperature at the end of the 24h measurement cycle	T5	74.1	℃
Storage volume	M_{act}	-	kg
Storage volume	C_{act}	79.6	L
Daily electricity consumption (corrected)	Q_{elec}	7.444	kWh
Sequence of SMART tapping cycles used during the test	M/S/M/S/M		
Useful energy content of the hot water drawn-off during smart period $Q_{reference,H2O}$ expressed in kWh:	$Q_{reference,H2O}$	24.126	kWh
Useful energy content of the hot water drawn-off during smart period $Q_{smart,H2O}$ expressed in kWh:	$Q_{smart,H2O}$	23.689	kWh
The weekly electricity consumption with smart controls	$Q_{elec,week,smart}$	28.361	kWh
The weekly electricity consumption without smart controls	$Q_{elec,week}$	36.021	kWh
Water heating energy efficiency	η_{wh}	39.91	%
Annual Electricity Consumption	AEC	1286.3	kWh
Water heating energy efficiency class	**B**		
Water temperature without tapping	T_{set}	75	℃
Average water temperature of inlet cold water	θ_c	10.6	℃
Normalised value of the average temperature	θ_p	68.3	℃
Calculated volume that delivered hot water of at least 40℃	V_{40}	121	L

The electrical storage water heater **AWH1643/10** of the company **Philips** Ltd. was tested with a declared load profile of the size **"M"**

The product fulfills and corresponds to the requirements of the commission regulation standards (No 814/2013) for electrical storage water heater and achieved a water heating energy efficiency of **ηwh=39.88%** that correspond to the water heating efficiency class **"B"**

In accordance with Annex Ⅱ Enercy Efficiency Classes article 1 of the commission regulation (No 812/2013)

The evaluation of the result of this report with respect of conformity with the related commission

regulation (No 812/2013 and 814/2019) is only a part of the conformity assessment to achieve the ErP-Label.

Electricity consumption Qelec, water heating energy efficiency ηwh and mixed water at 40℃ （V40）

Description	**Parameter**	**Value**	**Unit**
Smart control compliance	smart	1	
Smart control factor	SCF	21.2	%
Referenct energy	Q_{ref}	5.845	kWh
Useful energy content	Q_{H2O}	5.937	kWh
Correction ratio of reference and useful energy	Q_{ref}/Q_{H2O}	0.985	kWh
Daily electricityconsumption (measured)	Q_{test_elec}	7.689	kWh
Water temperature at the beginning of the 24h measurement cycle	T3	71.2	℃
Water temperature at the end of the 24h measurement cycle	T5	72.3	℃
Storage volume	M_{act}	-	kg
Storage volume	C_{act}	98.7	L
Daily electricity consumption (corrected)	Q_{elec}	7.445	kWh
Sequence of SMART tapping cycles used during the test	M/S/M/S/M		
Useful energy content of the hot water drawn-off during smart period $Q_{reference,H2O}$ expressed in kWh:	$Q_{reference,H2O}$	23.102	kWh
Useful energy content of the hot water drawn-off during smart period $Q_{smart,H2O}$ expressed in kWh:	$Q_{smart,H2O}$	22.725	kWh
The weekly electricity consumption with smart controls	$Q_{elec,week,smart}$	29.312	kWh
The weekly electricity consumption without smart controls	$Q_{elec,week}$	37.198	kWh
Water heating energy efficiency	η_{wh}	39.88	%
Annual Electricity Consumption	AEC	1287.3	kWh
Water heating energy efficiency class	**B**		
Water temperature without tapping	T_{set}	75	℃
Average water temperature of inlet cold water	θ_c	10.8	℃
Normalised value of the average temperature	θ_p	68.4	℃
Calculated volume that delivered hot water of at least 40℃	V_{40}	156	L

The electrical storage water heater **AWH1647/10** of the company **Philips** Ltd. was tested with a declared load profile of the size **"M"**

The product fulfills and corresponds to the requirements of the commission regulation standards (No 814/2013) for electrical storage water heater and achieved a water heating energy efficiency of **ηwh=39.42%** that correspond to the water heating efficiency class **"B"**

In accordance with Annex Ⅱ Enercy Efficiency Classes article 1 of the commission regulation (No 812/2013)

The evaluation of the result of this report with respect of conformity with the related commission

regulation (No 812/2013 and 814/2019) is only a part of the conformity assessment to achieve the ErP-Label.

Electricity consumption Qelec, water heating energy efficiency ηwh and mixed water at 40℃ （V40）

Description	**Parameter**	**Value**	**Unit**
Smart control compliance	smart	1	
Smart control factor	SCF	26.46	%
Referenct energy	Q_{ref}	5.845	kWh
Useful energy content	Q_{H2O}	6.12	kWh
Correction ratio of reference and useful energy	Q_{ref}/Q_{H2O}	0.955	kWh
Daily electricityconsumption (measured)	Q_{test_elec}	8.43	kWh
Water temperature at the beginning of the 24h measurement cycle	T3	71.5	℃
Water temperature at the end of the 24h measurement cycle	T5	71.1	℃
Storage volume	M_{act}	-	kg
Storage volume	C_{act}	110.5	L
Daily electricity consumption (corrected)	Q_{elec}	8.1	kWh
Sequence of SMART tapping cycles used during the test	M/-/-/S/M/S/M		
Useful energy content of the hot water drawn-off during smart period $Q_{reference,H2O}$ expressed in kWh:	$Q_{reference,H2O}$	22.714	kWh
Useful energy content of the hot water drawn-off during smart period $Q_{smart,H2O}$ expressed in kWh:	$Q_{smart,H2O}$	22.535	kWh
The weekly electricity consumption with smart controls	$Q_{elec,week,smart}$	29.448	kWh
The weekly electricity consumption without smart controls	$Q_{elec,week}$	40.045	kWh
Water heating energy efficiency	η_{wh}	39.42	%
Annual Electricity Consumption	AEC	1302.456	kWh
Water heating energy efficiency class	**B**		
Water temperature without tapping	T_{set}	75	℃
Average water temperature of inlet cold water	θ_c	10.5	℃
Normalised value of the average temperature	θ_p	68.3	℃
Calculated volume that delivered hot water of at least 40℃	V_{40}	186	L

8.Packing List

Water heater	1X
Instruction Manual	1X
Safety Valve	1X
Warranty Card	1X
Mounting Bracket	1X
Water Inlet/Outlet Pipe Adapter	2X
Rubber Washer	4X
Expansion bolt	2X(110L 4X)



Register your product and learn more via the website link below:

www.philips.com/water

Specifications are subject to change without prior notice

© 2026 AquaShield
All rights reserved.
Philips and the Philips Shield Emblem are registered trademarks of Koninklijke Philips N.V. and are used under license.
This product has been manufactured by and is sold under the responsibility of Shanghai Aquashield Health Technology Co., Ltd., and Shanghai Aquashield Health Technology Co., Ltd. is the warrantor in relation to this product.

Rev A AUG 26